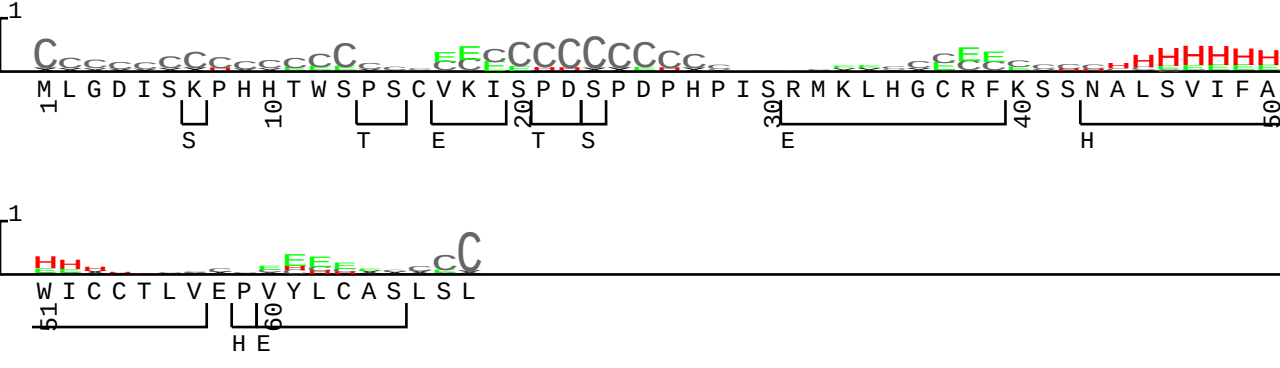YCR047W-A.t2k DSSP-EHL2